REMOVAL

1. REMOVE ROOF HEADLINING ASSEMBLY

HINT:

See page IR-5

2. REMOVE SLIDING ROOF GLASS SUB-ASSEMBLY

(a) Using a torx wrench (T25), remove the 4 screws the sliding roof glass.

(b) Pull the glass upward to remove it.

3. REMOVE SLIDING ROOF WEATHERSTRIP

4. REMOVE SLIDING ROOF DRIVE GEAR SUB-ASSEMBLY

NOTICE:

Remove the drive gear with the sliding roof fully closed.

(a) Disconnect the connector.

(b) Remove the 3 bolts and drive gear.

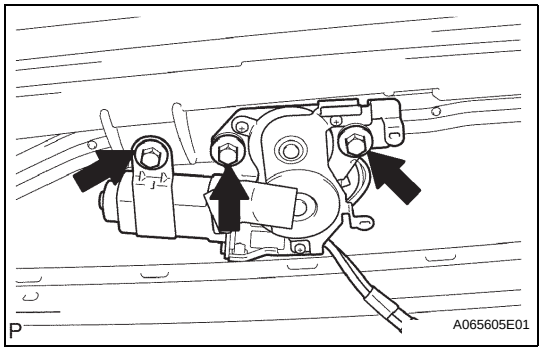

(c) Remove the screw and cam plate cover.

(d) Turn the drive gear to align the point marks, as shown in the illustration.

(e) Install the cam plate cover and screw.

NOTICE:

At the time of installation, if the sliding roof position and drive gear fully closed position are not aligned, the sliding roof will not operate normally.

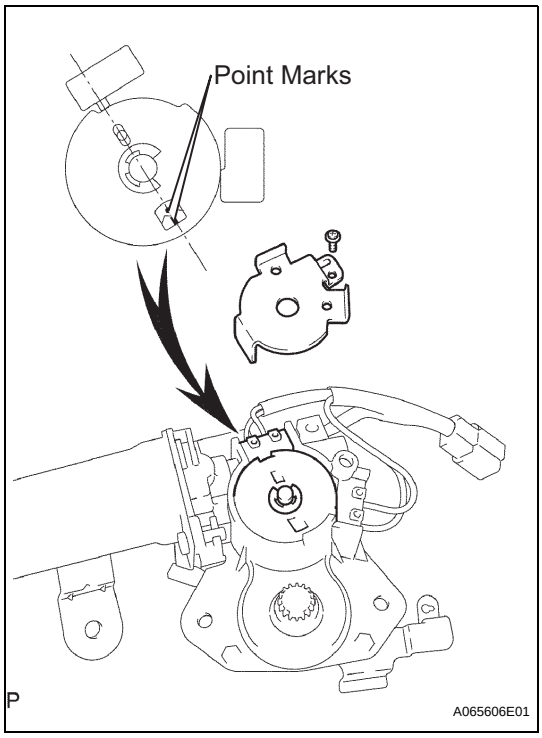

5. REMOVE SLIDING ROOF HOUSING ASSEMBLY

(a) Disconnect the 4 drain hoses from the housing.

(b) Remove the 8 bolts and 4 brackets.

(c) Remove the 6 nuts and housing.

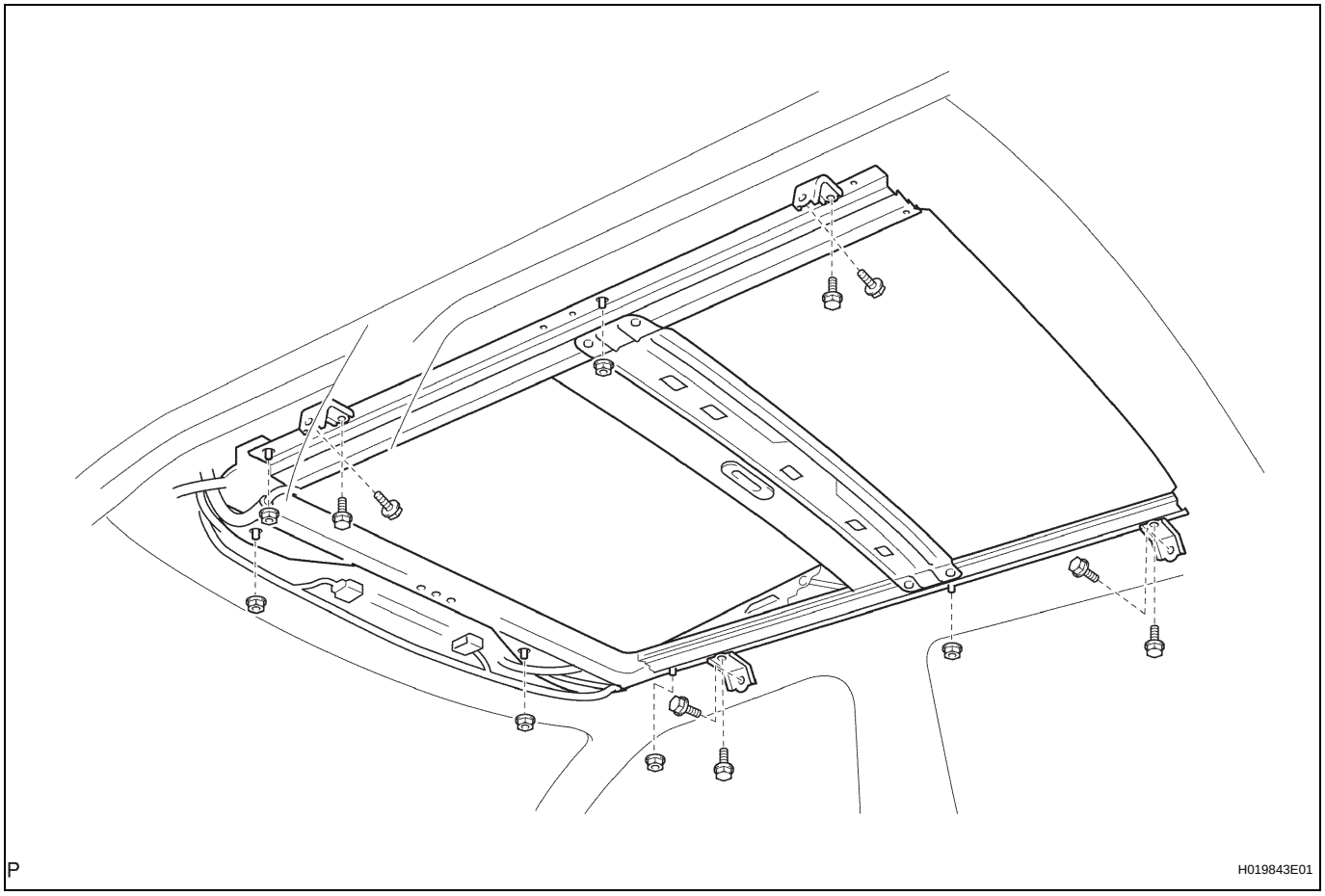

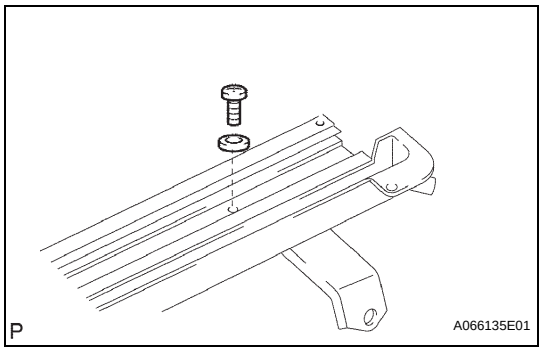

6. REMOVE SLIDING ROOF PANEL STOPPER

(a) Remove the 2 screws and 2 stoppers.

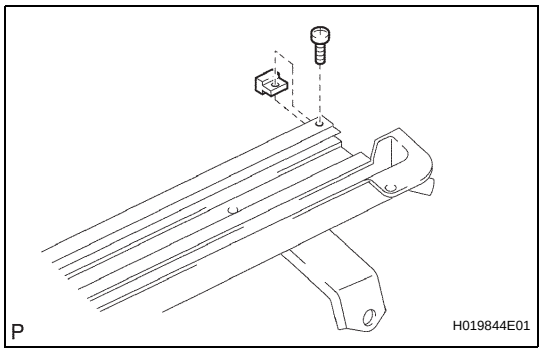

7. REMOVE SUNSHADE TRIM SUB-ASSEMBLY

(a) Remove the 2 screws and 2 stoppers.

(b) Slide the sunshade trim backward, and remove it.